ALTECH ELECTRONICS
The Future of Lighting

SLNG
Street Light
Architectural Series

Project: _____
Cat #: _____
Note: _____

STREET LIGHT ARCHITECTURAL SERIES

	30W & 60W	90W
Length:	20.5 in / 520 mm	28.7 in / 730 mm
Width:	8.6 in / 220 mm	11.6 in / 295 mm
Height:	4.9 in / 125 mm	5.5 in / 140 mm
Weight:	8.6 lb / 3.9 kg	16.9 lb / 7.6 kg

DLC QPL LISTED · WARRANTY 10 YEARS WARRANTY · IP65 · UL · Dimmable

Description
Our Streetlights are becoming the primary selection for governments around the world looking to brighten their roads. Topped with an unmatched 10-year wrap around warranty and 150 lumens per watt, the excuisite design of the model is only matched by its illuminance on the aslphalt.

Applications
Highways
Freeways
Neighborhoods
Streets
Roads

Details
IP Rating	IP65
Material	Die Cast Aluminum
Lens	Tempered Glass
EP Rating	0.32
L70 Life	100,000 Hours
Warranty	10 Years
CRI	80+
Certification	UL, FCC, CE, RoHS, UFC
Driver Man.	Mean Well
Chip Man.	Phillips

Electrical
Power Factor	0.99
Frequency	50/60 Hz
Max THD (%)	10
Operating Temp.	-31° F to 113° F -35° C to 45° C
Dimming	Optional

ALTECH MODEL #:	AE-L-SLNG-30	AE-L-SLNG-60	AE-L-SLNG-90
DLC #:	U-SLS-30	U-SLS-60	U-SLS-90
DLC Partner:	Ultron Industries		
Input Wattage:	30W	60W	90W
Equivalent:	175W MH	250W MH	375W MH

Ordering Information

Example: AE-L-SLNG-30-130-50K-1-MS-GR

Wtg	Lumen Pckge	Color Temp.	Input Voltage	Options	Finish
30 60 90	130 L/W*	30K - 3000K 40K - 4000K 50K - 5000K* 57K - 5700K	1 - 120-277V*	MS - Motion Sensor P - Photocell EI - Emergency Inverter	GR - Gray* BZ - Bronze W - White BL - Black SP - Other

*Standard

Standard Color: Gray

Custom Colors: Bronze, White, Silver, Black, Orange, Brown, Blue, Green, Red

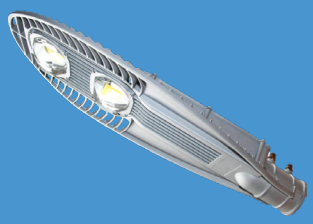

Notes:
- Only 5000K in GRAY are in stocked locally, check for ETA's

UPDATED: 2/6/2018

211 E. Ocean Blvd., Suite 400
Long Beach, CA 90802
800-640-0386
www.altechelectronics.com
ALTECH ELECTRONICS

STREET LIGHT ARCHITECTURAL SERIES

Lumen Output

System Watts	LPW	Total Lumens
30	130	3,900
60	130	7,800
90	130	11,700

Phenix External Emergency Inverter (18470X-3)

Dimensions

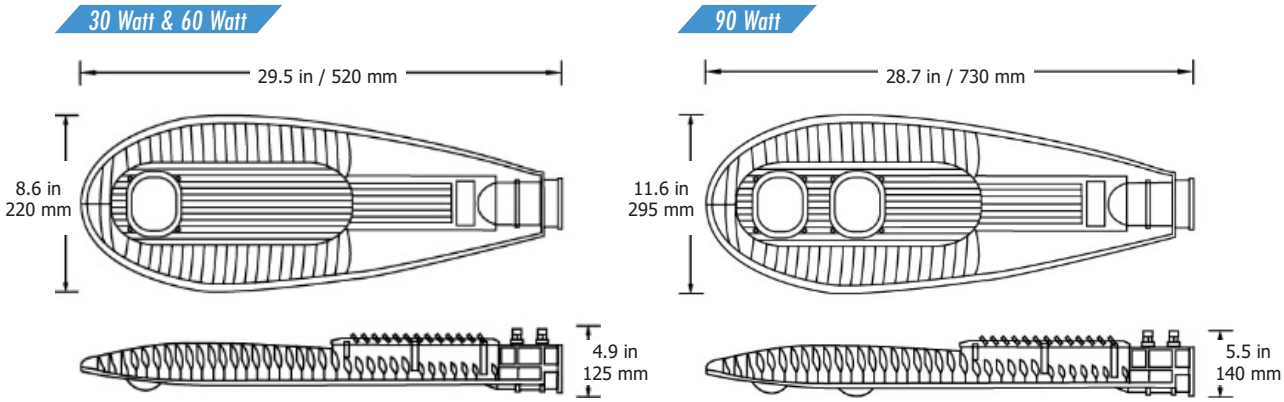

211 E. Ocean Blvd., Suite 400
Long Beach, CA 90802
800-640-0386
www.altechelectronics.com